LED Commercial Architectural Remodel Frame in Kit

WARNING : These products may represent a possible shock or fire hazard if improperly installed or attached in any way. Products should be installed in accordance with these instructions, current electrical codes and/or the current National Electric code(NEC).

Do not make or alther any open holes in a wiring enclosure nor any electrical components during kit installation.

WARNING : Risk of fire or electric shock. Kit installation requires knowledge of recessed lighting luminaires electrical systems. If not qualified, do not attempt installation. Contact a qualified electrician.

Do not use these products in luminaires located where elevated ambient temperatures exist.

WARNING : Risk of fire or electric shock. The electrical rating of this product is 120V Ac. The installer must determine whether power supply is 120V AC at the luminaire before installation.
(120V/277V Ac 50~60Hz is available if 120V/277V is indicated on caution label)

WARNING : Risk of fire or electric shock. Luminaire's wiring, ballast(s), or other electrical parts may be damaged when drilling for installation of reflector kit hardware. If drilling is required in any installation, check for enclosed wiring and components and be careful to protect them from any harm. To prevent wiring damage or abrasion, do not expose wiring to edges of sheet metal or other sharp objects.

HOUSING INSTALLATION

1. Cutting a hole

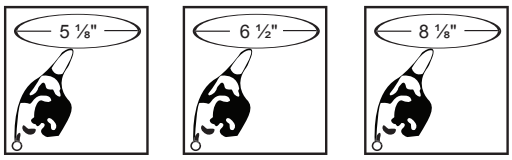

4" HOUSING 6" HOUSING 8" HOUSING

2. Electrical connection

- Open junction box door and connect fixture wires to building wires in the following sequence White fixture wire to white neutral wire black fixture wire to (hot) black wire and green ground wire to bare ground wire.
- Use push-in type wire connectors supplied or white nuts.
- Replace junction box door.

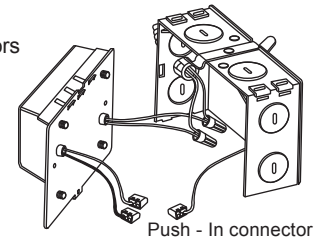

Push - In connector

3. Insert the housing in ceiling cutout as illustrated.

- Push clips in to the frame (fig. 1).
- Insert Architectural remodel frame into ceiling, junction box first. Hold fixture up against ceiling.
- To lock clip in place push flat portion against side of frame(fig. 2).
- To release pull down on clip(fig. 3).

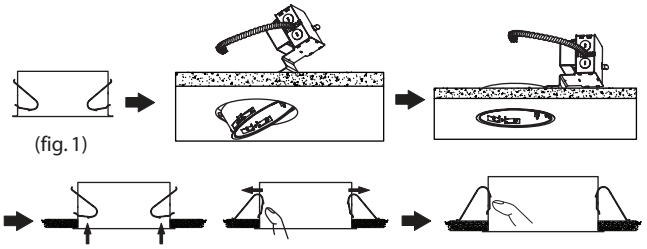

(fig. 1) (fig. 2) (fig. 3)

TRIM INSTALLATION

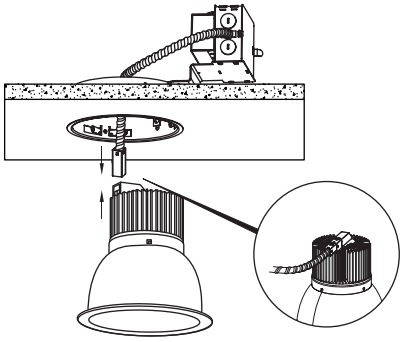

1. Connect female and male connector
2. Fasten case of the connector

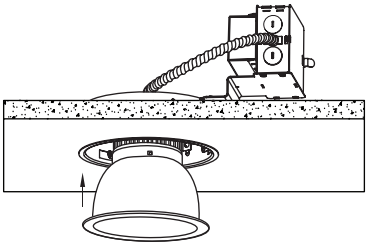

3. Push Trim up to ceiling

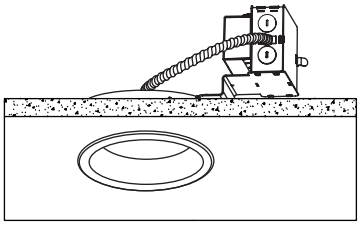

4. Push Trim gently to ceiling until seated

LIST OF COMPATIBLE DIMMERS :

Mfr	Model #	Dimming Rate
Lutron	NFTV	10 - 100%
Lutron	NTSTV-DV	10 - 100%
Legrand	CD4FBLW	10 - 100%