PROJECT:	
LOCATION:	
MODEL#:	TYPE:
CLIENT:	QTY:
PREPARED BY:	DATE:

LXPC3GWRC

SERIES SPECIFICATIONS

The LXPC Series Emergency Combination Unit features dual adjustable LED lamp heads, green letters and a 90-minute battery backup. Designed with a durable thermoplastic housing which includes cover plates for single or double-face installations. Ideal for offices, schools, retail spaces, and other commercial applications.

LUMINAIRE SPECIFICATIONS

Lumen Output: 60lm
Luminaire Type: Exit and Emergency Combo

ELECTRICAL SPECIFICATIONS

Input Frequency: 50Hz / 60Hz
Rated Input Voltage: 120VAC / 277VAC
Wattage: 3.25W

EMERGENCY SPECIFICATIONS

Battery Recharge Time: 24hr
Emergency Certifications: UL924
Emergency Runtime: 90Minutes
Input Voltage: 120/277VAC

CERTIFICATIONS

Performance Certifications: Title 20
Safety Certifications: cULus Listed

ENVIRONMENTAL SPECIFICATIONS

Temperature Rating Range: 20-30°C
UL Location Rating: Damp Location

PHYSICAL SPECIFICATIONS

Finish Color: White / Green
Finish Type: Plastic
Height: 7.125in.
Housing Material: Thermoplastic
Length: 18in.
Lens Material: Polycarbonate
Mounting: Surface
Weight: 1.9lbs
Width: 1.75in.
Wiring Type: 3-Wire (L-N-G)

PROJECT:	
LOCATION:	
MODEL#:	TYPE:
CLIENT:	QTY:
PREPARED BY:	DATE:

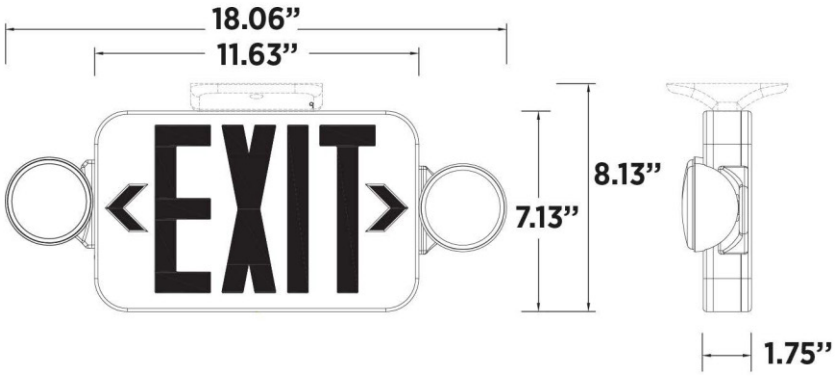

WARRANTY INFORMATION

Warranty: 5 Years

NOTES

Total unit output 60 lumens

Remote-Capable version offers up to an additional 3.44 Watts for 90 minutes

Top, back or J-box mounting through universal mounting plate and canopy

Replacement battery 3.6V rechargeable Ni-Cad 1800mAh

PROJECT:	
LOCATION:	
MODEL#:	TYPE:
CLIENT:	QTY:
PREPARED BY:	DATE:

EXAMPLE: LXPC3RWEM

SERIES	NO. OF FACES	LETTER COLOR	HOUSING COLOR	BATTERY	OPTIONS
LXPC	[3]: Universal Single and Double Face	[R]: Red [G]: Green	[W]: White [B]: Black	[EM]: Battery Backup Standard	[Blank]: No Options [HL]: High Lumen [RC]: Remote Capable [SD]: Self-Diagnostic

SHIPPING SPECIFICATIONS

Case

Height: 4in.
Length: 19.5 in.
QTY: 1
Weight: 3.5lbs
Width: 9in.

Master Case

Height: 9.25 in.
Length: 20in.
QTY: 6
Weight: 18lbs
Width: 16.5 in.

PROJECT:	
LOCATION:	
MODEL#:	TYPE:
CLIENT:	QTY:
PREPARED BY:	DATE:

Pallet

Height: 60 in.
Length: 48 in.
QTY: 180

Weight: 565lbs
Width: 40 in.