PROJECT:	
LOCATION:	
MODEL#:	TYPE:
CLIENT:	QTY:
PREPARED BY:	DATE:

LSRH2-MULTI

SERIES SPECIFICATIONS

The LSRH Series features single or double adjustable square LED heads designed to provide dependable emergency egress lighting. Compatible with 3.6V, 6V, 9.6V, and 12V emergency lighting systems, it delivers reliable illumination where additional coverage is required.

LUMINAIRE SPECIFICATIONS

Luminaire Type: Remote Head

ELECTRICAL SPECIFICATIONS

Rated Input Voltage: 3.6VDC / 6VDC / 9.6VDC / 12VDC
Wattage: 2W

EMERGENCY SPECIFICATIONS

Emergency Certifications: UL924
Max Power Input: 2W

CERTIFICATIONS

Safety Certifications: UL Listed

ENVIRONMENTAL SPECIFICATIONS

Temperature Rating: 0-50°C
UL Location Rating: Damp Location

PHYSICAL SPECIFICATIONS

Finish Color: White
Finish Type: Plastic
Height: 4.8in.
Housing Material: Thermoplastic
Length: 8.5in.
Lens Material: Polycarbonate
Mounting: Surface
Weight: 1.2lbs
Width: 4.5in.

PROJECT:	
LOCATION:	
MODEL#:	TYPE:
CLIENT:	QTY:
PREPARED BY:	DATE:

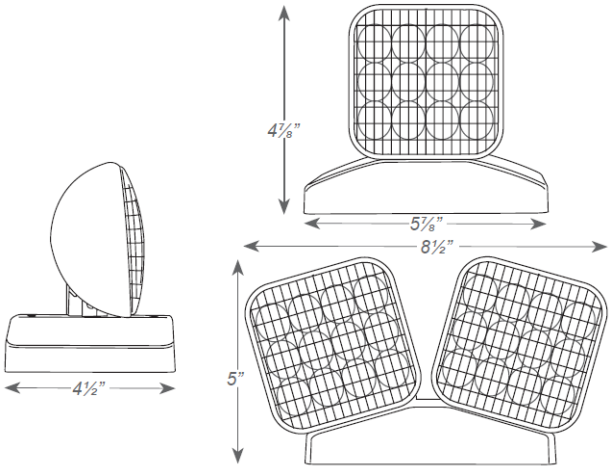

WARRANTY INFORMATION

Warranty: 5 Years

NOTES

Damp location rated for indoor use

PROJECT:	
LOCATION:	
MODEL#:	TYPE:
CLIENT:	QTY:
PREPARED BY:	DATE:

EXAMPLE: LSRH1-MULTI

SERIES	LAMP HEAD	INPUT VOLTAGE	COLOR	OPTION
LSRH	[1]: Single head [2]: Double head	[-MULTI]: Multi-volt 3.6V, 6V, 9.6V, 12V	[Blank]: White [-B]: Black	[Blank]: Standard output [-HL]: High lumen output

SHIPPING SPECIFICATIONS

Case

Height: 4.5 in.
Length: 10 in.
QTY: 1
Weight: 1.5lbs
Width: 7.5 in.

Master Case

Height: 10 in.
Length: 23 in.
QTY: 12
Weight: 18lbs