PROJECT:	
LOCATION:	
MODEL#:	TYPE:
CLIENT:	QTY:
PREPARED BY:	DATE:

LSRH1-MULTI-WP-B

SERIES SPECIFICATIONS

The LSRH Series features single or double adjustable square LED heads designed to provide dependable emergency egress lighting. Compatible with 3.6V, 6V, 9.6V, and 12V emergency lighting systems, it delivers reliable illumination where additional coverage is required.

3.6 VDC | 6 VDC | 9.6 VDC | 12 VDC | UL LISTED | 5 YEAR LIMITED WARRANTY | WET LOCATION

LUMINAIRE SPECIFICATIONS

Luminaire Type: Remote Head

ELECTRICAL SPECIFICATIONS

Rated Input Voltage: 3.6VDC / 6VDC / 9.6VDC / 12VDC
Wattage: 1W

EMERGENCY SPECIFICATIONS

Emergency Certifications: UL924
Max Power Input: 1W

CERTIFICATIONS

Safety Certifications: UL Listed

ENVIRONMENTAL SPECIFICATIONS

Temperature Rating Range: -30-50°C
UL Location Rating: Wet Location

PHYSICAL SPECIFICATIONS

Finish Color: Black
Finish Type: Powder Coated
Height: 6.7in.
Housing Material: Aluminum / Thermoplastic
Length: 10.3in.
Mounting: Surface
Weight: 1lbs
Width: 4.5in.

PROJECT:	
LOCATION:	
MODEL#:	TYPE:
CLIENT:	QTY:
PREPARED BY:	DATE:

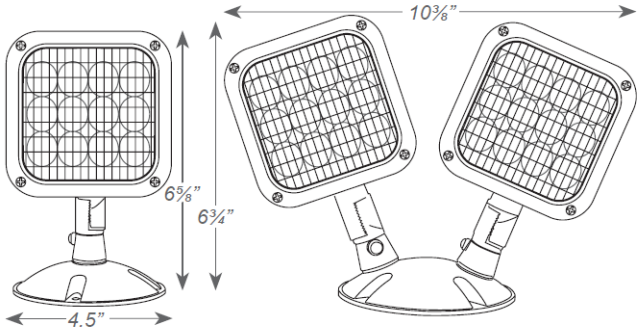

WARRANTY INFORMATION

Warranty: 5 Years

NOTES

Wet location rated for outdoor or indoor use

PROJECT:	
LOCATION:	
MODEL#:	TYPE:
CLIENT:	QTY:
PREPARED BY:	DATE:

EXAMPLE: LSRH1-MULTI-WP

SERIES	LAMP HEAD	INPUT VOLTAGE	TYPE	COLOR	OPTION
LSRH	[1]: Single head [2]: Double head	[-MULTI]: Multi-volt 3.6V, 6V, 9.6V, 12V	[-WP]: Weatherproof	[Blank]: Gray [-B]: Black	[Blank]: Standard output [-HL]: High lumen output

SHIPPING SPECIFICATIONS

Case

Height: 4.75 in.
Length: 7.25 in.
QTY: 1
Weight: 1.25lbs
Width: 5.25 in.

Master Case

Height: 10.25 in.
Length: 16.75 in.
QTY: 12
Weight: 12lbs