PROJECT:	
LOCATION:	
MODEL#:	TYPE:
CLIENT:	QTY:
PREPARED BY:	DATE:

LT-4-P

SERIES SPECIFICATIONS

The LT Series is a single-circuit line voltage track system engineered for commercial and architectural lighting applications. Designed for durability and flexibility, it supports customizable lighting layouts with reliable performance.

ELECTRICAL SPECIFICATIONS

Current Draw 120VAC: 20A
Input Frequency: 50Hz / 60Hz
Rated Input Voltage: 120VAC

CERTIFICATIONS

Safety Certifications: cULus Listed

ENVIRONMENTAL SPECIFICATIONS

UL Location Rating: Dry Location

PHYSICAL SPECIFICATIONS

Conductor Material: Copper
Construction Type: Insulated
Finish Color: White
Height: 11/16in.
Housing Material: Aluminum
Length: 4ft
Mounting: Surface
Width: 1-3/8in.

PROJECT:	
LOCATION:	
MODEL#:	**TYPE:**
CLIENT:	**QTY:**
PREPARED BY:	**DATE:**

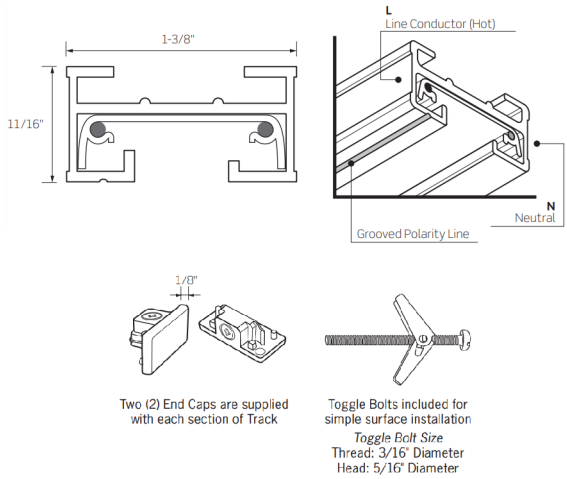

WARRANTY INFORMATION

Warranty: 1 Year

NOTES

-Toggle Bolts included for simple surface installation; other mounting options include: T-Bar Clips, Stems, Threaded Rods and Aircraft Cable

-Each Nominal Track Length supplied with two (2) insulated End Caps; replacements available

-Use a minimum of two (2) Mounting Points for 2, 4 and 6 foot Track Sections, three (3) Mounting Points for 8 foot Sections and four (4) Mounting Points for 12 foot Sections of Track.

PROJECT:	
LOCATION:	
MODEL#:	TYPE:
CLIENT:	QTY:
PREPARED BY:	DATE:

EXAMPLE: LT-2-B

SERIES	SIZE	FINISH
LT	**[-2]:** 2Ft Track **[-4]:** 4Ft Track **[-6]:** 6Ft Track **[-8]:** 8Ft Track	**[-B]:** Black **[-P]:** White **[-S]:** Silver

SHIPPING SPECIFICATIONS