| | |
|---|---|
| PROJECT: | |
| LOCATION: | |
| MODEL#: | TYPE: |
| CLIENT: | QTY: |
| PREPARED BY: | DATE: |

# CTL9052MPF35CD-B

## SERIES SPECIFICATIONS

**The CTL905 Series LED Mono-Point delivers high-quality accent lighting for retail, hospitality, gallery, commercial, and residential spaces. With up to 3,441 lumens and 90+ CRI, it enhances merchandise, artwork, and architectural features with accurate color rendering. Spot, Medium Flood, Flood, and Wide Flood beam distributions provide precise beam control, while multiple color temperatures support a range of design requirements. Offered in black and white finishes.**

## LUMINAIRE SPECIFICATIONS

**Lumen Output:** 1462lm
**Luminaire Beam Angle:** 33°
**Luminaire Type:** Mono-Point Head

## LIGHT SOURCE SPECIFICATIONS

**CRI:** 90
**Nominal CCT:** 3500K
**Source Type:** LED

## ELECTRICAL SPECIFICATIONS

**Input Frequency:** 50Hz / 60Hz
**Rated Input Voltage:** 120VAC
**Wattage:** 14W

## CERTIFICATIONS

**Performance Certifications:** Title 24 / DLC
**Safety Certifications:** cETLus Listed

## ENVIRONMENTAL SPECIFICATIONS

**UL Location Rating:** Dry Location

## PHYSICAL SPECIFICATIONS

**Finish Color:** Black
**Height:** 3-3/4ft
**Housing Material:** Aluminum
**Length:** 4-13/16in.
**Lens Type:** Clear Optics
**Mounting:** Surface or Ceiling
**Width:** 2-3/4in.

| | |
|---|---|
| PROJECT: | |
| LOCATION: | |
| MODEL#: | TYPE: |
| CLIENT: | QTY: |
| PREPARED BY: | DATE: |

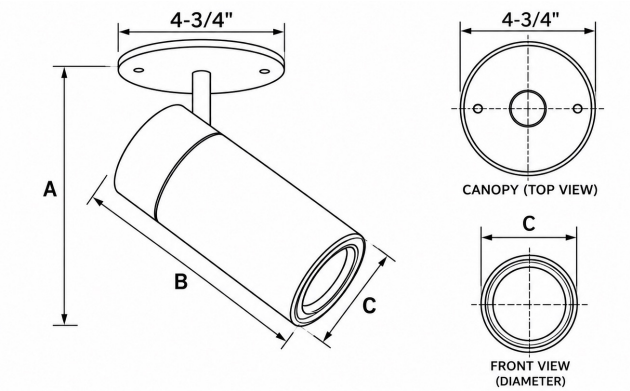


| Model | A | | B | C |
|---|---|---|---|---|
| | Min | Max | Body | Diameter |
| **CTL9050** | 3-3/8" | 5-1/8" | 4-1/8" | 2-3/8" |
| **CTL9051** | 3-3/4" | 5-5/8" | 4-13/16" | 2-3/8" |
| **CTL9052** | 3-3/4" | 5-5/8" | 4-13/16" | 2-3/4" |
| **CTL9053** | 4-7/16" | 7-1/8" | 6-1/16" | 3-5/16" |
| **CTL9059** | 5" | 8" | 6-13/16" | 3-15/16" |
| **CTL9054** | 5" | 8" | 6-13/16" | 3-15/16" |

## WARRANTY INFORMATION

**Warranty:** 5 Years

| | |
|---|---|
| PROJECT: | |
| LOCATION: | |
| MODEL#: | TYPE: |
| CLIENT: | QTY: |
| PREPARED BY: | DATE: |

**TRACK HEADS – Mono-Point**

EXAMPLE: CTL9054MPF35CD-P

| SERIES | LUMINAIRE | MOUNTING | BEAM | COLOR TEMPERATURE | DIMMING | FINISH |
|---|---|---|---|---|---|---|
| **CTL** | **[9050]:** 7W<br>**[9051]:** 9W<br>**[9052]:** 14W<br>**[9053]:** 20W<br>**[9059]:** 29W<br>**[9054]:** 34W | **[MP]:** Mono-Point | **[S[1]]:** Spot<br>**[M[2]]:** Medium<br>**[F]:** Flood<br>**[WF]:** Wide Flood | **[27C]:** 2700K<br>**[3C]:** 3000K<br>**[35C]:** 3500K<br>**[4C]:** 4000K | **[D[3]]:** Dimming | **[-B]:** Black<br>**[-P]:** White<br>**[-S]:** Silver |

1. Spot Beam available only for CTL9050 Series
2. Medium Beam not available for CTL9050 Series
3. Incandescent (Forward Phase) and ELV (Reverse Phase) Compatible

## SHIPPING SPECIFICATIONS